MODEL NUMBER	DESCRIPTION	PANEL METER OPENING	DIMENSION A	DIMENSION B	DIMENSION C	DIMENSION D	DIMENSION E	DIMENSION F	DIMENSION G
PME-01	LOW-COST PLASTIC ENCLOSURE FOR ONE METER	1-49/64 X 3-5/8	–	–	–	–	–	–	–
PME-02	LOW-COST PLASTIC ENCLOSURE FOR TWO METERS	1-49/64 X 3-5/8	–	–	–	–	–	–	–
PME-12	PLASTIC ENCLOSURE FOR TWO METERS	1-49/64 X 3-5/8	7-7/8 [200.10]	11-51/64 [299.47]	7-7/64 [180.59]	–	2-31/64 [63.30]	5-1/16 [128.42]	8-27/32 [224.60]
PME-15	PLASTIC ENCLOSURE FOR FIVE METERS	1-49/64 X 3-5/8	11-13/16 [299.90]	15-23/32 [399.29]	7-3/32 [180.18]	1-17/64 [31.97]	2-7/16 [61.74]	8-61/64 [227.59]	13-9/32 [337.40]
PME-16	PLASTIC ENCLOSURE FOR SIX METERS	1-49/64 X 3-5/8	11-13/16 [299.90]	15-23/32 [399.29]	7-3/32 [180.18]	1-17/64 [31.97]	2-7/16 [61.74]	8-61/64 [227.59]	13-9/32 [337.40]

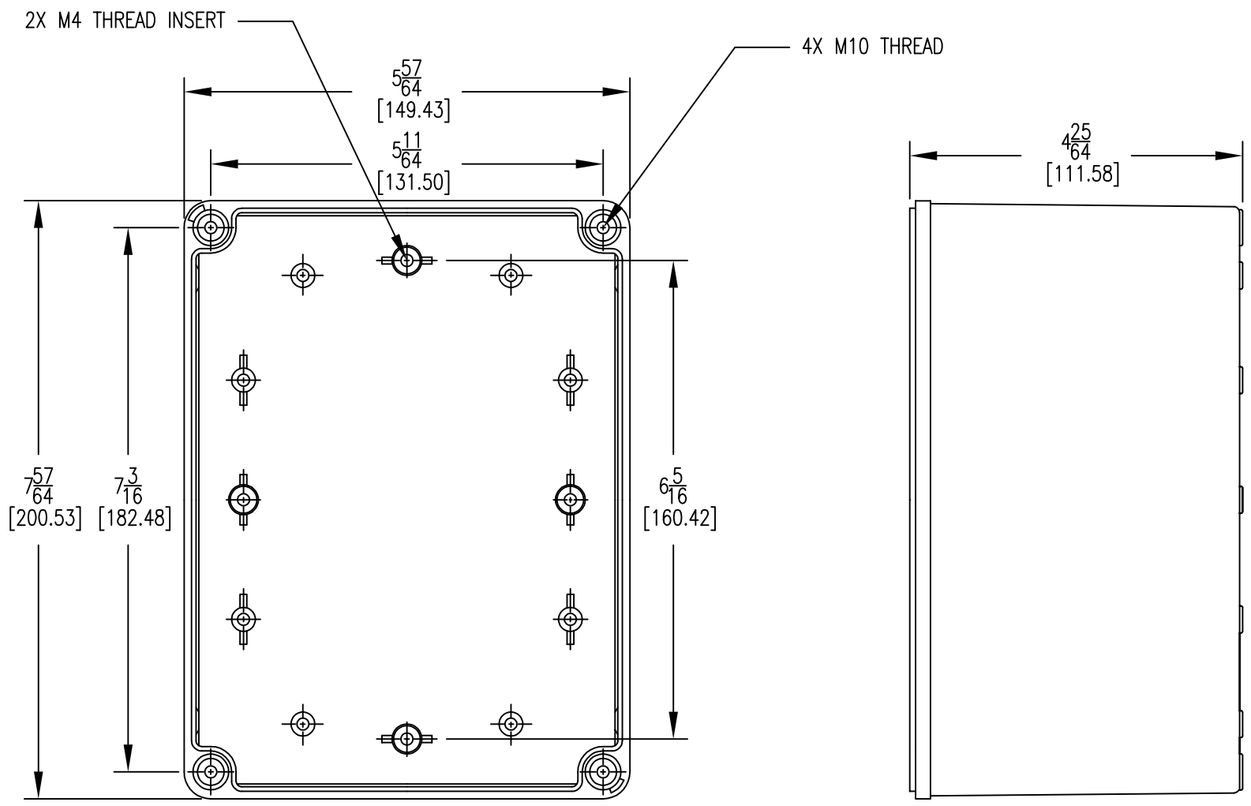

BOTTOM
PME-01 & PME-02

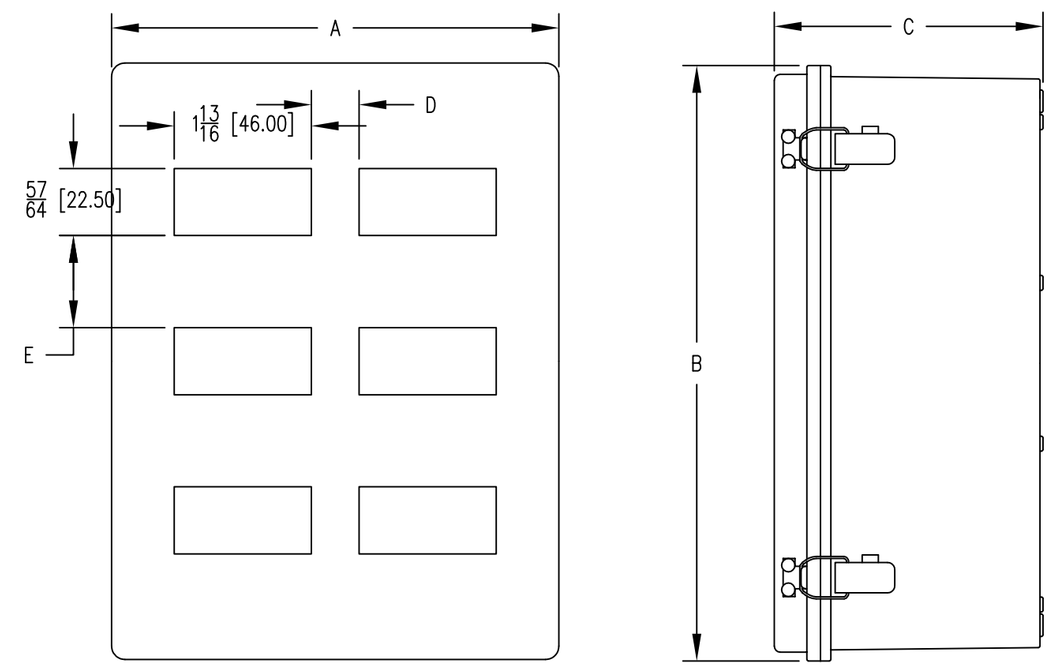

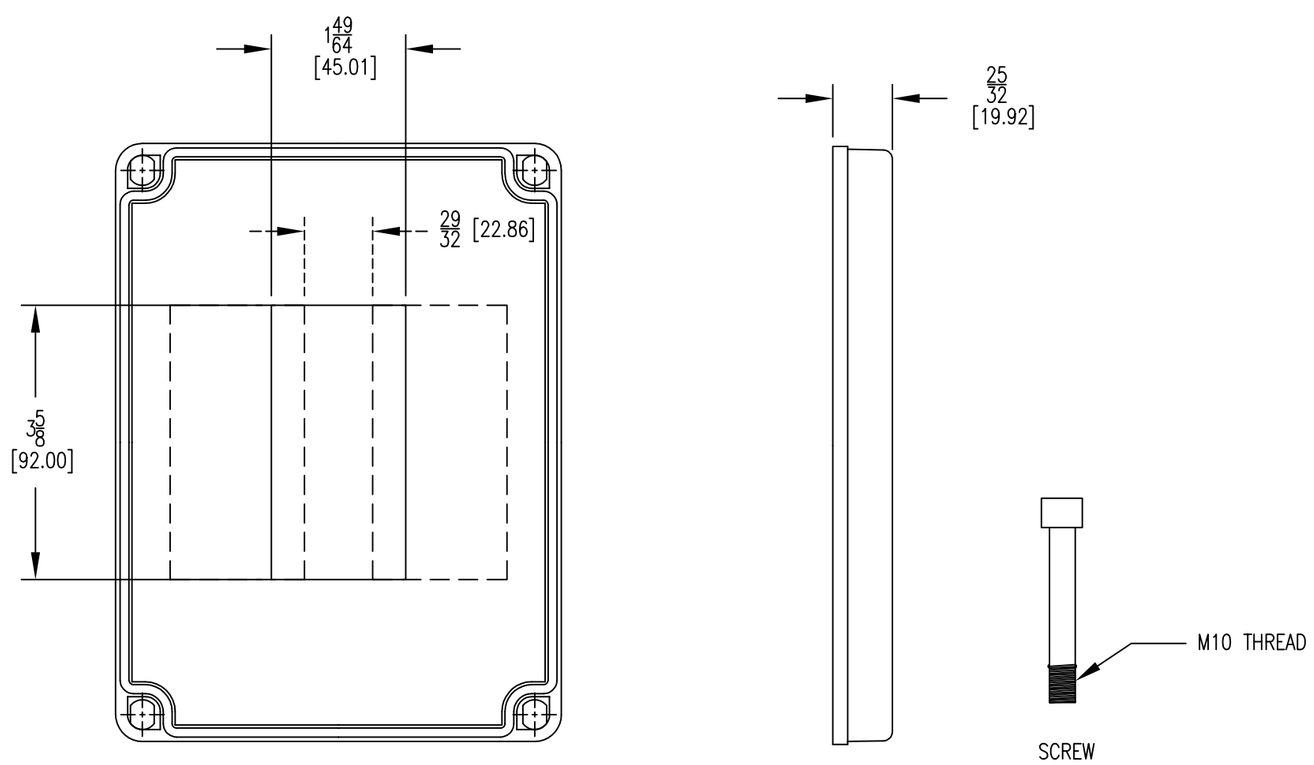

COVER
PME-01 & PME-02

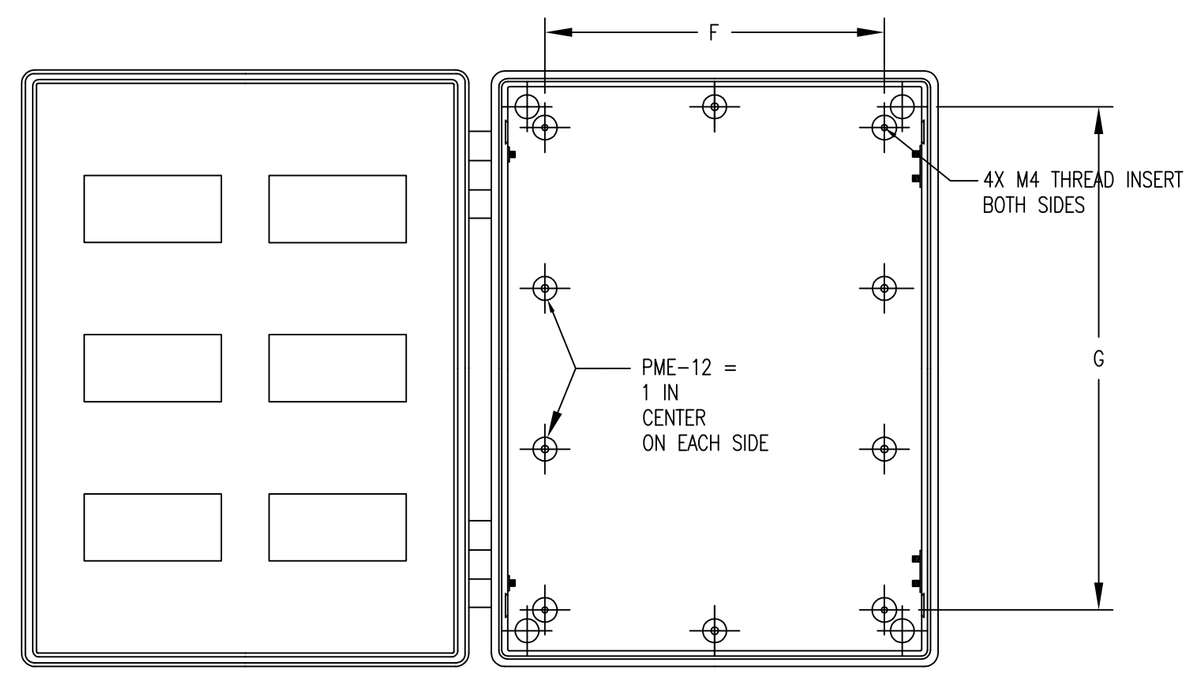

PME-12, PME-15, PME-16
(NOT TO SCALE)

(CD) = CRITICAL DIMENSION
STANDARD TOLERANCES UNLESS NOTED:
ALL DECIMAL DIMENSIONS ± .005
ALL ANGLES ± 1°

SCALE 1:2

NO.	CHANGES	BY/DATE

DATE
DWN BY
CHKD
APPD

NAME: PME SERIES ENCLOSURES FOR PANEL METERS

ACAD2002

MATERIAL
FINISH

DWYER INSTRUMENTS, INC.
MICHIGAN CITY, INDIANA 46360 U.S.A.

FR. NO.

NOTICE: This drawing and the principles and elements of design embodied therein are the exclusive property of DWYER INSTRUMENTS, INC. and are not to be communicated, disclosed, reproduced or used except as previously authorized in writing by such corporation and must not be submitted to outside parties for examination without the written consent of said corporation.